Angular Contact Ball Bearings

70 Series Angular Contact Ball Bearings-7026AC

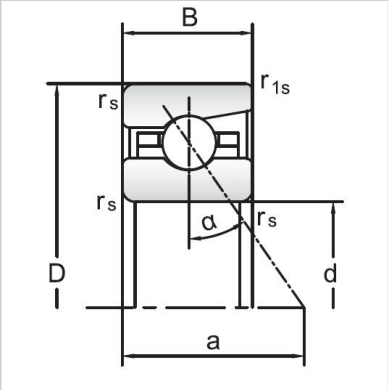

Bearing NO.	**7026AC**
Dimensions(mm)	
d	130
D	200
B	33
ramin	**2**
r1min	1
Mounting dimensions	
da min	142.5
Da/Db max	187.5
ra max	**2**
rb max	1
Loading kN	
Cr	136.8
Cor	181
Limited Speed r/min	
Lub.	6000
Oil.	9000
Prelaoding N	
A(L)	1200
B(M)	3600
C(H)	7200
Axial rigidityRa N/μm	
A(L)	346
B(M)	485
C(H)	610
Weight Kg ≈	3.18