Angular Contact Ball Bearings

72 Series Angular Contact Ball Bearings-7204C

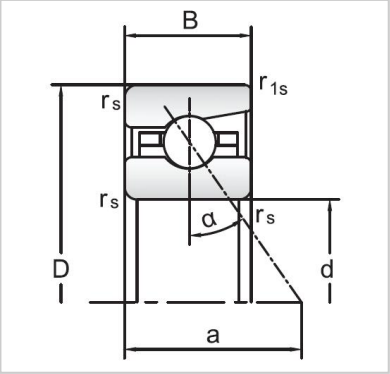

Bearing NO.	**7204C**
Dimensions(mm)	
d	**20**
D	47
B	14
ramin	1
r1min	0.3
Mounting dimensions	
da min	26.5
Da/Db max	40.5
ra max	1
rb max	0.3
Loading kN	
Cr	13.1
Cor	9.6
Limited Speed r/min	
Lub.	34000
Oil.	50000
Prelaoding N	
A(L)	70
B(M)	210
C(H)	420
Axial rigidityRa N/μm	
A(L)	27
B(M)	39
C(H)	49
Weight Kg ≈	0.11