Angular Contact Ball Bearings

Double direction angular contact ball bearing-234709M

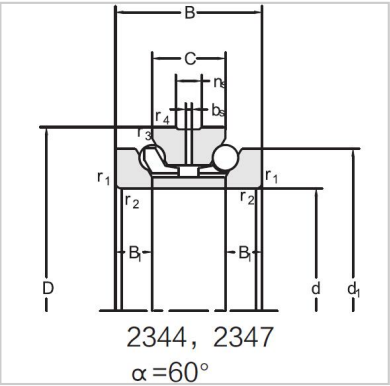

Bearing NO.	**234709M**
Dimension(mm)	
d	**47**
D	75
d1	65
T	38
C	19
B	9.5
rsmin	1
r1smin	0.2
Assembly Demension	
da	57.5
Da	**70**
ra	1
rb	0.15
Loading(KN)	
Ca	23.2
Coa	45
RPM(r/min)	
Lub.	7500
Oil	10000
Oil groove and oil hole(mm)	
n	4.8
k	3.2
Stiffness(N/μm)	
Ra	387
Weight(Kg)	
≈	0.53