Angular Contact Ball Bearings

High speed Angular Contact Ball Bearings-H71903C/HC

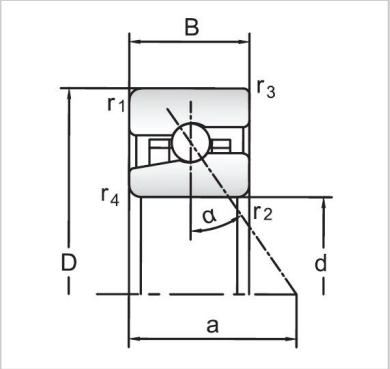

Bearing NO.	**H71903C/HC**
Dimensions(mm)	
d	17
D	30
B	**7**
Basic Loading Ratings(KN)	
C	3.32
C0	1.56
Fatigue limit Pu (kN)	0.067
Calculation coefficient f0	7.9
Limiting speeds (r/min)	
Grease	83000
Oil	127000
d1 ~	21.1
D1 ~	25.9
r1,2 min	0.3
r3,4 min	0.15
a	**7**
da,db min (mm)	**19**
Da max (mm)	28
Db max (mm)	28.6
ra max (mm)	0.3
rb max (mm)	0.15
Weight (kg)	0.014