Angular Contact Ball Bearings

High speed Angular Contact Ball Bearings-H71906AC/HC

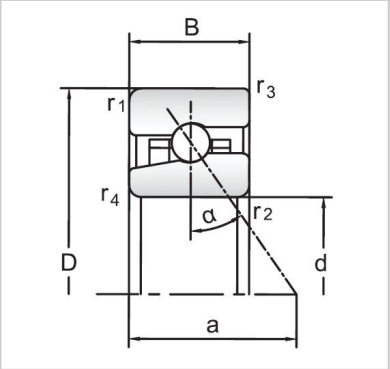

Bearing NO.	**H71906AC/HC**
Dimensions(mm)	
d	30
D	47
B	**9**
Basic Loading Ratings(KN)	
C	5.27
C0	3.1
Fatigue limit Pu (kN)	0.132
Calculation coefficient f0	-
Limiting speeds (r/min)	
Grease	44000
Oil	70000
d1 ~	35.8
D1 ~	41.4
r1,2 min	0.3
r3,4 min	0.15
a	14
da,db min (mm)	32
Da max (mm)	45
Db max (mm)	45.6
ra max (mm)	0.3
rb max (mm)	0.15
Weight (kg)	0.045