Angular Contact Ball Bearings

High speed Angular Contact Ball Bearings-H71911AC

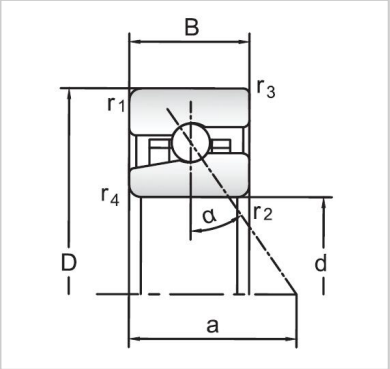

Bearing NO.	**H71911AC**
Dimensions(mm)	
d	55
D	80
B	13
Basic Loading Ratings(KN)	
C	14.6
C0	10.2
Fatigue limit Pu (kN)	0.43
Calculation coefficient f0	-
Limiting speeds (r/min)	
Grease	21000
Oil	32000
d1 ~	62.8
D1 ~	72.3
r1,2 min	**1**
r3,4 min	0.3
a	23
da,db min (mm)	59.6
Da max (mm)	75.4
Db max (mm)	77.6
ra max (mm)	**1**
rb max (mm)	0.3
Weight (kg)	0.17