Angular Contact Ball Bearings

Single direction angular contact thrust ball bearings-751122 MS P/5

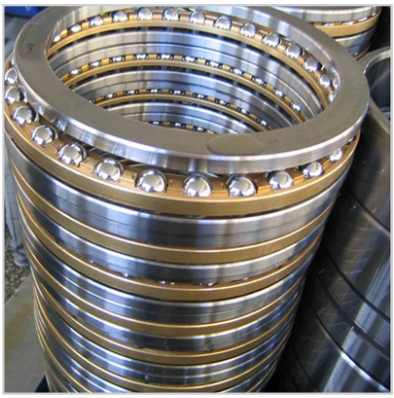

Weight	
Wgt. lbs	**751122 MS P/5**
Dimension(Metric)	
H	110
Dg	120
Dw	136
Dg	145
Dw	25
Bearing	2.16

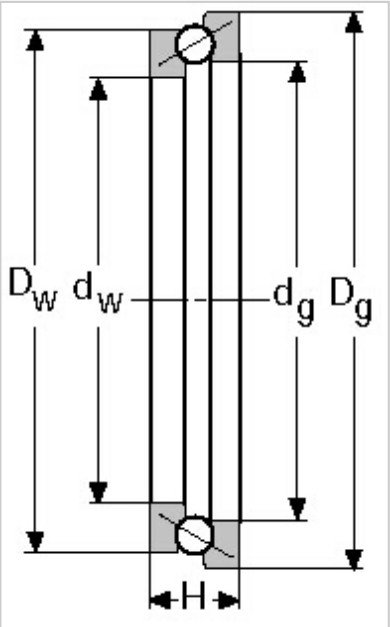

Single direction angular contact thrust ball bearings

Single direction angular contact thrust ball bearings have been developed specially for the support of ball and roller screws in machine tools, and they also can be used successfully for other applications. These non-separable design bearings, which have a ball-centred cage of the polyamide 6,6 incorporating a large number of balls, stands particularly close conformity between the balls and raceways with 60º contact angle. These design characteristics contribute to?

(1) High axial stiffness of the bearing

(2) Suitable for the accommodation of radial load in addition to axial load

(3) High running accuracy especial for axial running

(4) High speed and acceleration performance

(5) Low friction torque

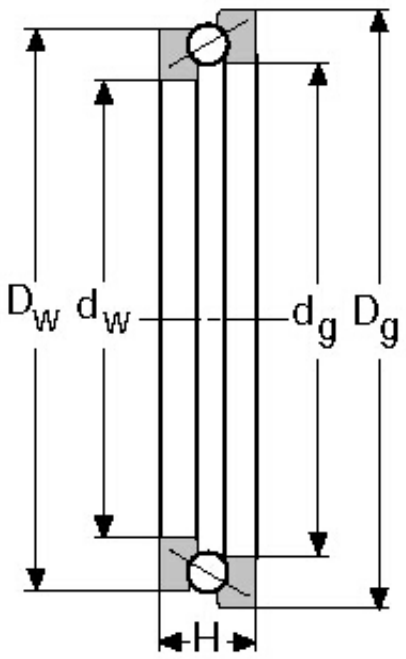

MONTON single direction angular contact thrust ball bearings can be supplied in matched sets of two, three or four bearings.