Ultra High-Speed Angular Contact Ball Bearings

BGR Series Ultra High-Speed Angular Contact Ball Bearings-25BGR10H

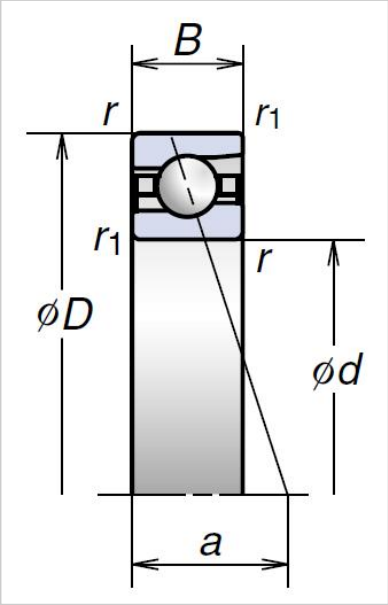

Bearing NO.	**25BGR10H**
Dimensions	
D (mm)	**25**
d (mm)	47
2B (mm)	12
r Min	0.6
r1 Min	0.3
Basic Loading Ratings(KN)	
Cr (Dynamic)	7.9
C0r (Static)	3.75
Permissible axial load (KN)	3.05
Effective load center(mm) a	10.8
Limiting speeds □rpm□min-1	
Grease	52800
Oil	77800
Weight (kg)	0.068