ZKLF ZKLN Double Direction Axial Angular Contact Ball Bearings

ZKLF Axial angular contact ball bearings-

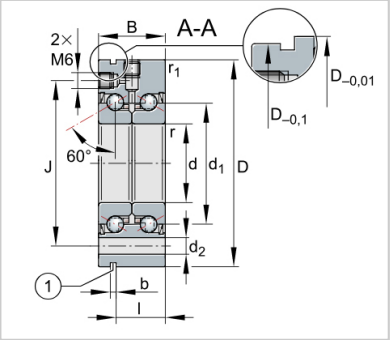

Designation	ZKLF1560-2Z
Mass □m = kg□	0.43
Dimensions	
d –0,005	15
D –0,01	60
B –0,25	25
d1	28
r min.	0.3
r1 min.	0.6
J	46
d2	6.8
b	3
l	17
Pitch n×t	3×120°
Mounting dimensions	
Da max.	35
da min.	20
t1	0.1
Fixing screwsDIN EN ISO 4762 10.9	
Size	M6
na×ta	3×120°
Basic load ratings axial	
dyn. Ca N	19600
stat. C0a N	28000
Fatigue limit load □Cu N□	1650
Limiting speed □nG grease min–1□	10800
Thermally safe operating speed □nP min–1□	7000
Bearing frictional torque MR Nm	0.1
Rigidity axial caL N/µm	400
Tilting rigidity ckL	65
Mass moment of inertia Mm	0.102
Axial runout µm	2
Recommended INA precision locknut	
For radial locking	ZM15
For axial locking	AM15
Tightening torque MA Nm	10
Required locknut force axial N	5484