Angular Contact Ball Bearings

76020 Series Ball Screw Support Angular Contact Ball Bearings-7602060TVP

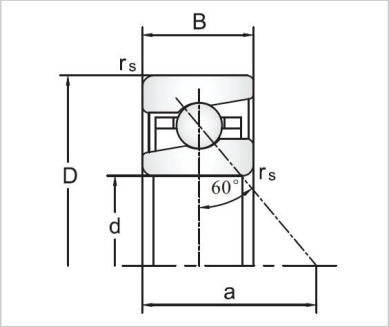

Bearing NO.	**7602060TVP**
Dimension(mm)	
d	**60**
D	110
B	22
Rsmin	1.5
a	86
Assembly Dimension	
da	77
Da	96
Ra	1.5
Loading(KN)	
Ca	56
Coa	112
RPM(r/min)	
Lub.	5000
Oil	6700
Preload(KN)	
Fao	6.5
Stiffness(N/μm)	1620
Unload(KN)	
Fam	18
Friction(Nmm)	
torque	350
Grease filling(g)	
Reference quantity	11
Weight(kg)	
≈	0.96