Angular Contact Ball Bearings

High speed Angular Contact Ball Bearings-H7019AC

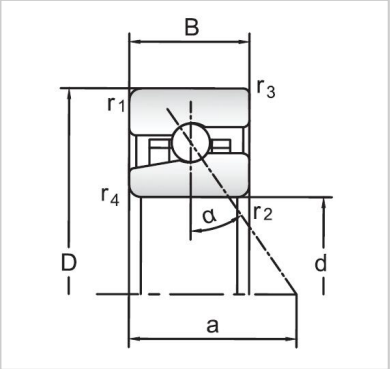

Bearing NO.	**H7019AC**
Dimensions(mm)	
d	95
D	145
B	24
Basic Loading Ratings(KN)	
C	41.6
C0	36
Fatigue limit Pu (kN)	1.4
Calculation coefficient f0	-
Limiting speeds (r/min)	
Grease	11 500
Oil	18000
d1 ~	112.4
D1 ~	131
r1,2 min	1.5
r3,4 min	**1**
a	40
da,db min (mm)	102
Da max (mm)	138
Db max (mm)	139.4
ra max (mm)	1.5
rb max (mm)	**1**
Weight (kg)	1.2