Angular Contact Ball Bearing

B718XX Ultra light Series Angular Contact Ball Bearings-B71836-E-TPA-P4

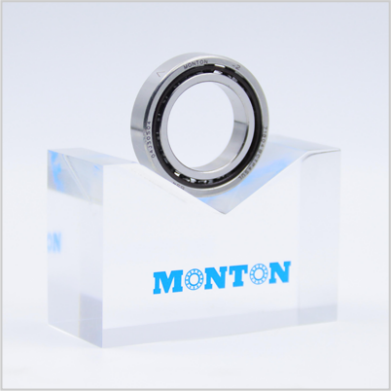

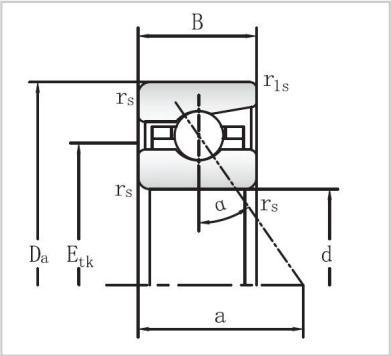

Designation	**B71836-E-TPA-P4**
Dimensions	
d	180
D	225
B	22
Basic loading	
Dynamic Cr KN	67
Static Cor KN	86.5
Weight	
KG	4300
Limiting Speed	
nG Oil	6300
nG Greas	1.7

MONTON B718XX ultra light series angular contact ball bearings size from10mm to 300 mm. The B718XX

series bearings are mainly used in applications for small cross-sections are required as design parameters.

They are high-speed bearings with compact cross-section design. MONTON provides light series bearings

with contact angles of 15°, 20° and 25°. Ultra-light series angular contact ball bearings can use small or

large balls, steel balls or ceramic balls, open and sealed bearings, DLR designed bearings, and ultra-light

series angular contact ball bearings with smaller contact fit and small steel balls. Therefore, it can adapt to

very high speeds, and the load capacity of the bearing is lower than that of the 70/72 series.

MONTON B718XX ultra light series angular contact ball bearings are mainly suitable for light load, high

speed and high stiffness application. B718XX ultra light series bearings are contain the largest number of

balls according to the inner diameter size; according to the given outer diameter , B718XX ultra light series

can accommodate the largest shaft diameter. The characteristic very important for system rigidity. As the

shaft diameter increases, the stiffness of the shaft increases, as the number of balls increases, the stiffness

of the bearing configuration also increases. MONTON B718XX ultra-light series angular contact ball

bearings are filled with the largest number of small balls. Smaller and lighter balls reduce the centrifugal

load acting on the outer ring raceway, thereby reducing the rolling contact surface stress. Because smaller

balls require less space, the bearing rings have a larger cross-sectional height, making them insensitive to

deformation caused by irregularities in the bearing mounting surface, bearing seat or shaft. It has high

reliability and high precision in applications such as high-speed machining centers, milling machines,

internal grinders and woodworking machines.

MONTON's different bearing variant designs include:

1. Single installation U (universal) or assembled in group ad D (Double) T (Triple) Q (Quater), etc.

2. Universal bearings or universal bearing sets

3. Bearings using steel balls or hybrid ceramic ball bearings

4. Open bearings or bearings with seals on both sides

5. Bearings directly lubricated through the circumferential lubrication grooves

and radial lubrication

holes on the outer ring of the bearing

6. Preload is divided into three types: light L, medium M, and heavy H

Main applications include:

1. Multi-axis drills such as machine tools

2. Robots

3. Printing machines

4. Measuring devices

5. Gearboxes

6. Automobile assembly lines

7. Engraving machine spindles

8. Tool holder sleeves

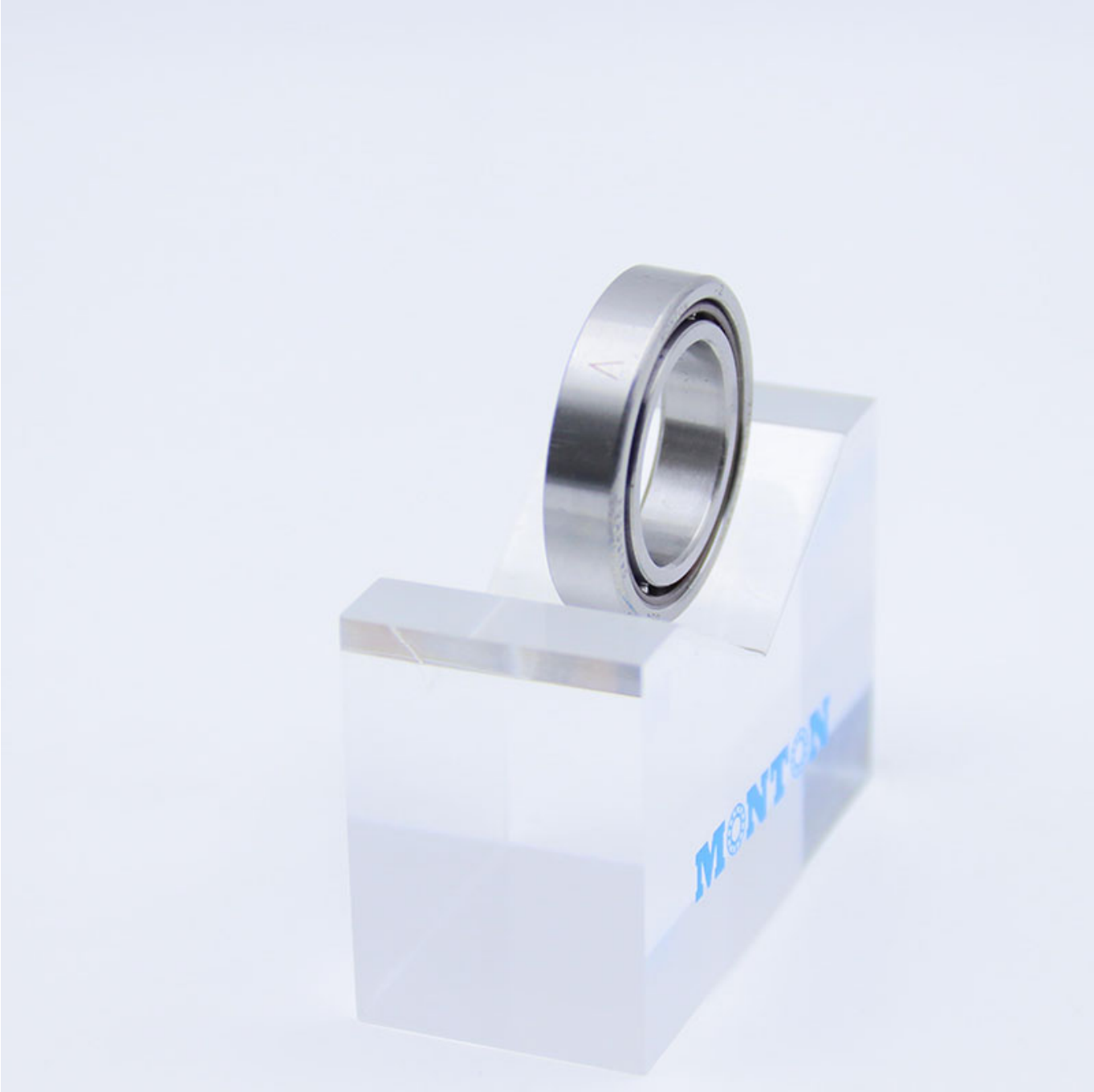

Our company has professional sales and technical engineers who are responsible for providing users

with technical consultation, technical services and product technical training on precision bearing

information and installation and application. Perfect pre-sales, in-sales and after-sales services

constitute a guarantee system for high-quality services, providing users with reliable quality bearing

products, and creating excellent user experience and rich benefits for every user.

If you have any questions about products and services, please contact the company's service

department directly.