ZKLF ZKLN Double Direction Axial Angular Contact Ball Bearings

ZKLF Axial angular contact ball bearings-ZKLF40115-2RS

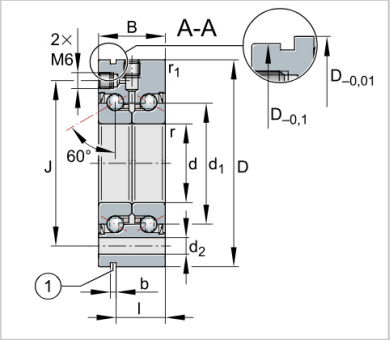

Designation	**ZKLF40115-2RS**
Mass □m = kg□	2.2
Dimensions	
d –0,005	**40**
D –0,01	**115**
B –0,25	46
d1	65
r min.	0.6
r1 min.	0.6
J	94
d2	8.8
b	3
l	36
Pitch n×t	12×30°
Mounting dimensions	
Da max.	80
da min.	56
t1	0.2
Fixing screwsDIN EN ISO 4762 10.9	
Size	M8
na×ta	12×30°
Basic load ratings axial	
dyn. Ca N	79000
stat. C0a N	149000
Fatigue limit load □Cu N□	8800
Limiting speed □nG grease min–1□	3500
Thermally safe operating speed □nP min–1□	1600
Bearing frictional torque MR Nm	1.3
Rigidity axial caL N/µm	1200
Tilting rigidity ckL	750
Mass moment of inertia Mm	5.5
Axial runout µm	2.5
Recommended INA precision locknut	
For radial locking	ZMA40/62
For axial locking	AM40
Tightening torque MA Nm	110
Required locknut force axial N	25185