Customized Bearing

Full complement cylindrical roller bearings-NCF 2919 CV

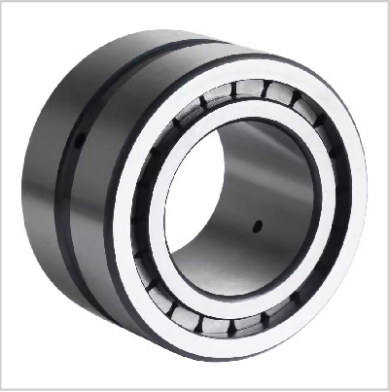

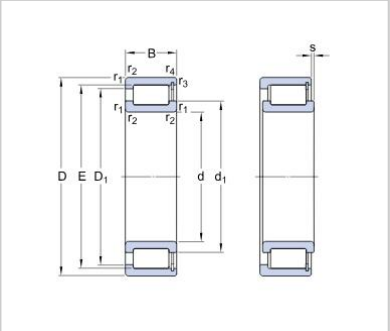

Alternative code	**NCF 2919 CV**
Boundary dimensions mm	
S	SL18 2919
r1	95
B	130
D	22
d	1.1
Mass	
KG	**1**
Limiting Speed rpm	
Grease	118
Oil	179
Load Rating kN	
Co	2900
C	2400
Bearings	0.86

Full complement cylindrical roller bearings

Design specification

Main dimensions

Main dimensions of full complement cylindrical roller bearings are specified in the dimension tables and they are in accordance with the international standards ISO 15 with the exception of the NNF 50 range, where the width of the outer ring is 1 mm smaller. All other dimensions are the same.

Structure

Full complement cylindrical roller bearings have three main parts – the inner ring equipped with flanges, cylindrical rollers and the outer ring. According to the arrangement, snap rings, angle ring or seals are added.

The following constructions are most common

NCF

These are the most common full complement cylindrical roller bearings. The inner ring has two flanges, the outer ring has one flange on one side and a snap ring, which keeps the bearing assembled on the other side. NCF bearings are able to carry axial load from one side a they are able to accommodate certain minor axial displacement of the shaft. The permissible values for this displacement are in the dimension tables.

Double row bearings

Double row full complement cylindrical roller bearings are all supplied with a lubrication groove with holes in the outer ring, which enables full lubrication access into the rolling space of each row of cylindrical rollers. The inner ring of the NNC, NNCL and NNCF design has three guiding flanges to ensure guiding accuracy of cylindrical rollers. They differentiate by the number of guiding flanges and snap rings in the outer ring. These components stop the rolling elements from falling out.

NNC

One side of outer ring is equipped with guiding flange, the other side has snap ring to keep the cylindrical rollers in place. These bearings can carry the axial load in both directions.

NNCL

NNCL bearings have the flangeless outer ring therefore certain axial bearing rings displacement against each other is accommodated.

NNCF

The outer ring has one flange and one snap ring. These components accommodate axial load transfer in one direction and also certain shaft displacement of the housing.

NNF

NNF bearings are produced with guiding flanges in the two-piece inner ring, which is held together by a retaining ring. The outer ring has a guiding flange. These bearings can also carry the axial load in both directions and as per bigger distance between individual rows of

cylindrical rollers, they can transfer a tilting moments.

The outer ring of an NNF bearing is 1 mm narrower than the inner ring and has two snap ring grooves. These bearings are supplied as standard with seals on both sides and the inner space is filled with grease to enable the bearing operation in standard working conditions up to 110°C.

Tolerance

Full complement cylindrical roller bearings are produced as standard in tolerance class P0. Production of bearings with higher tolerance should be discussed in advance. Dimension tolerances are in accordance with the international standards and are stated in ISO 492 standard.

NNC design is the exception to above as it comes in various outer ring widths. They can vary up to double of the tolerance.

Radial clearance

Full complement cylindrical roller bearings are produced and supplied as standard in standard radial clearance or alternatively in C3 clearance. The radial clearance C2 (smaller than standard clearance), alternatively C4, C5 (greater than standard and C3 clearance). Radial clearance values are in accordance with the ISO 5753 standard. These values are applicable for manufactured and unassembled bearing.

Stabilisation for operation at higher temperature

For operating temperature higher than 120°C specially stabilized bearings with individually heat-treated components to ensure dimension and shape stability under long-term exposure to temperatures ranging from 150°C to 400°C (S0, S1, S2, S3 and S4) are supplied. Delivery of stabilized bearings should be discussed in advance.

Suffixes

This list shows suffixes for deliverable designs which differ from the standard:

2NR two separately included snap rings type WRE (bearing type NNF)

BR	burnished
C3	radial internal clearance higher than CN*1
C4	radial internal clearance higher than C3*1
C5	radial internal clearance higher than C4*1
HA1	inner ring and outer ring from case hardening steel*1
HB1	inner ring and outer ring from bainite hardened*1
P6	dimensional and running tolerance less than PN*1
P5	dimensional and running tolerance less than P6*1
PH	phosphated*1
PP	sealing rings on both sides
S0	heat stabilized up to 150°C
S1	heat stabilized up to 200°C
S2	heat stabilized up to 250°C
V	full complement
VH	full complement, self-retaining set of rollers