Customized Bearing

LNG Pump Bearing-MTS6317PTSN

Description	**MTS6317PTSN**
Dimension	
d	85
D	180
B	41
rsmin	contact us
Loading□KN□	
Cor	for
Cr	more
Speed	
(r/min)	technical information

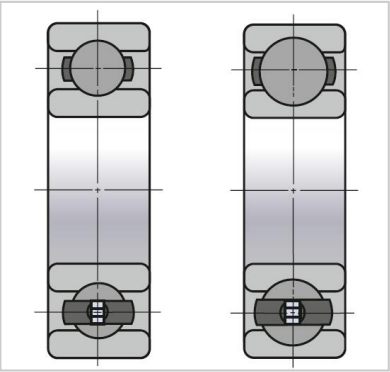

LNG Pump Bearings

LNG (Liquefied Natural Gas) pumps are used for receiving and discharging LNG to road tankers and storage tanks. For these applications the bearing operating conditions are very tough, as the temperature can reach -162°C, and the bearing must run without external lubrication. MONTON has designed a new bearing, **LNG Pump Bearings**, to cope with these demanding performance requirements.

LNG pump bearings including:

1.Angular contact ball bearings

2.Deep groove ball bearings

› Speed: 1160 rpm – 3600 rpm
› Gas temperature: –196° C up to 0° C
› Mainly axial load
› Very poor lubrication

Condition Description:

Arduous Environments

Corrosive Environment

High Speed

Low temperature

Industry:

Chemical and Pharmaceutical

Petrochemical

Features:

Stainless steel inner and outer rings

Stainless steel rolling elements/Ceramic balls

Riveted fluororesin cage/Ptfe cage

Long life

Benefits:

Corrosion resistant

Self-lubricating cage

High speed (up to 3600 rpm)

Extended life

Now we have the below codes under production and have stock:

MTS6205PTSN

MTS6206PTSN

MTS6207PTSN

MTS6208PTSN

MTS6209PTSN

MTS6210PTSN

MTS6211PTSN

MTS6212PTSN

MTS6213PTSN

MTS6214PTSN

MTS6215PTSN

MTS6216PTSN

MTS6217PTSN

MTS6311PTSN

MTS6312PTSN

MTS6313PTSN

MTS6314PTSN

MTS6315PTSN

MTS6316PTSN

MTS6317PTSN

MTS6318PTSN

MTS6319PTSN

MTS6320PTSN

MTS6321PTSN

MTS6322PTSN

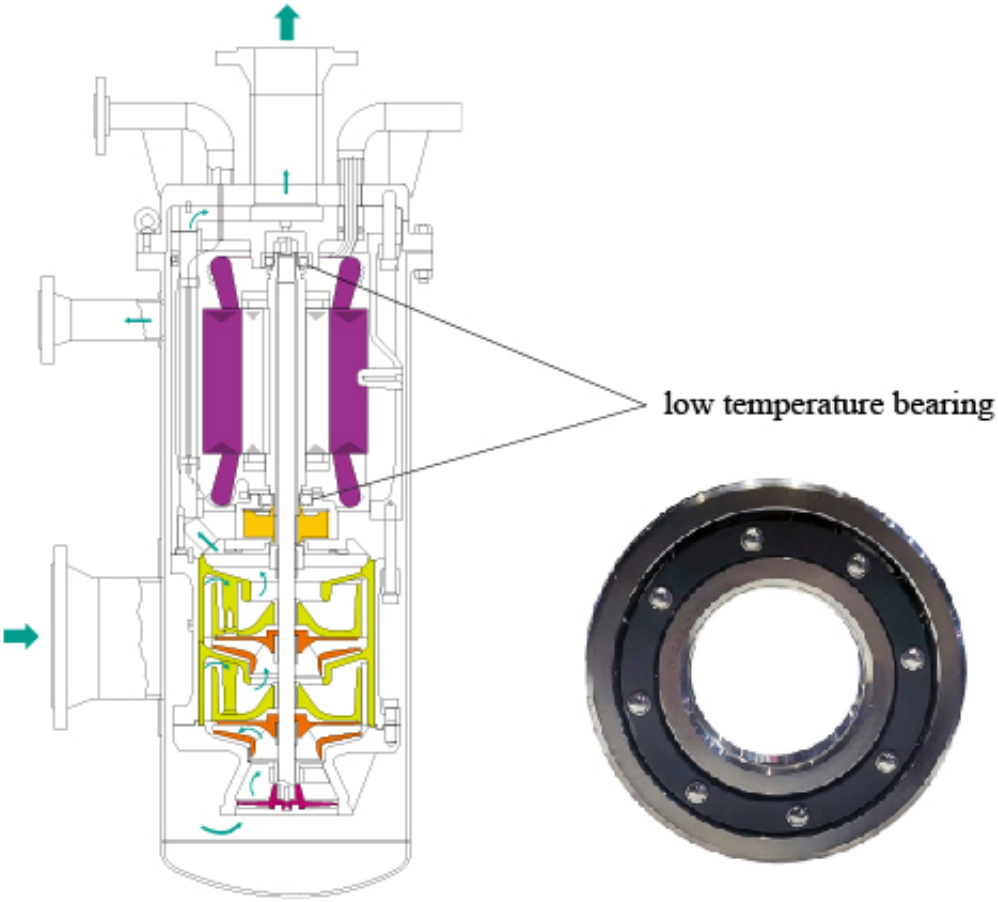

Now monton have developed the low temperature angular contact

ball bearings and low temperature deep goove ball bearings.Our bearings have been widely used by our customers wins very good reputation..

We welcome you here if you have any inquires or questions.